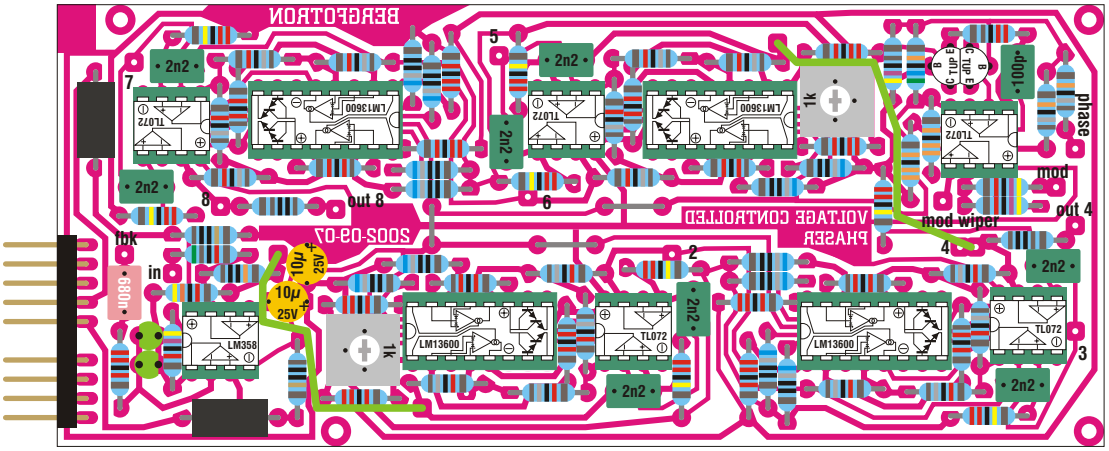4 stage phaser