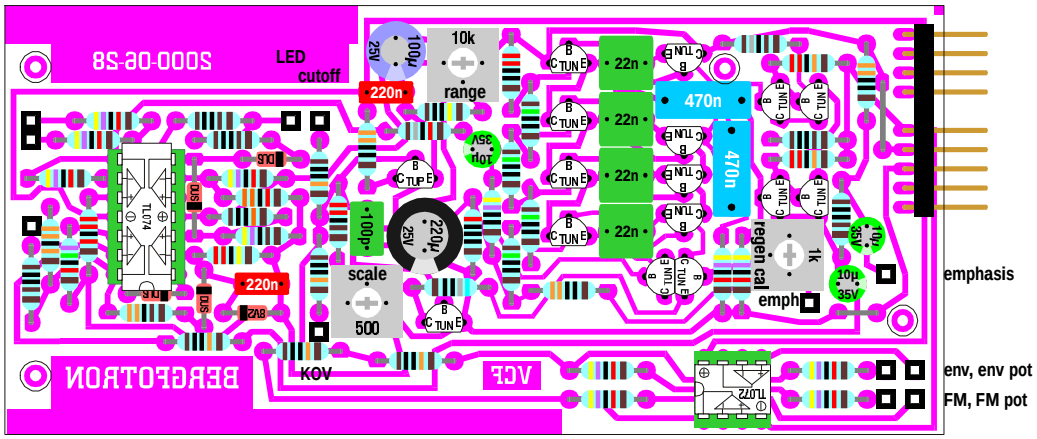
emphasis
env, env pot
FM, FM pot
1k
emph
regen cal
470n
470n
22n
22n
22n
22n
10k
range
100µ
25V
220n
220n
100p
220µ
25V
scale
500
KOV
VCF
LED
cutoff
TL074
TL072
BERGFOTRON
2000-06-28